Dimensions

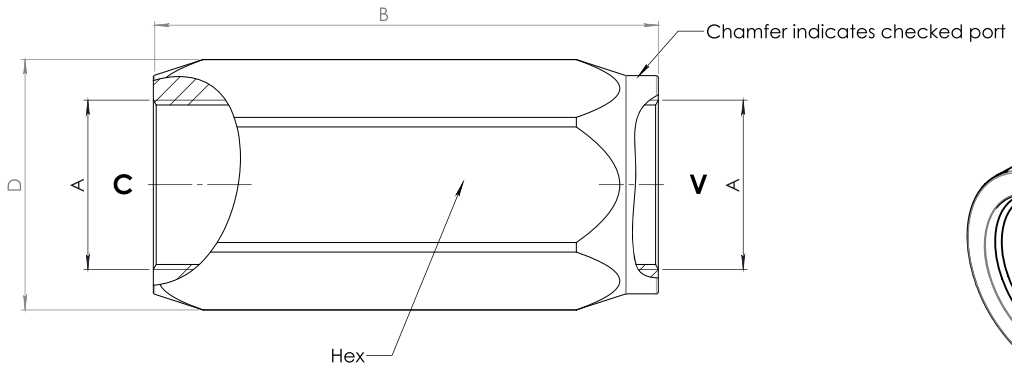

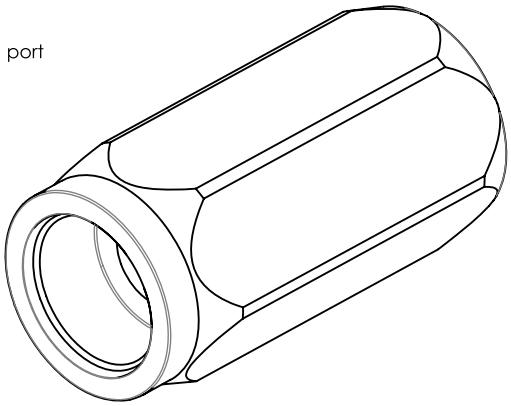

Size	A BSP	B	D	Hex	Weight kg	Max Pressure bar	Max Flow rate lpm
01	1/4	58	21	19	0,10	400	30
02	3/8	62	27	24	0,19	400	50
03	1/2	71	33	30	0,32	350	90
04	3/4	83	40	36	0,58	300	130
05	1	106	57	50	0,93	280	180
06	1 1/4	125	63	55	1,51	260	250
07	1 1/2	137	74	65	2,41	220	380

Hydraulic Symbol

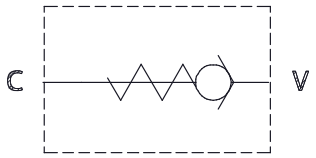

Curves

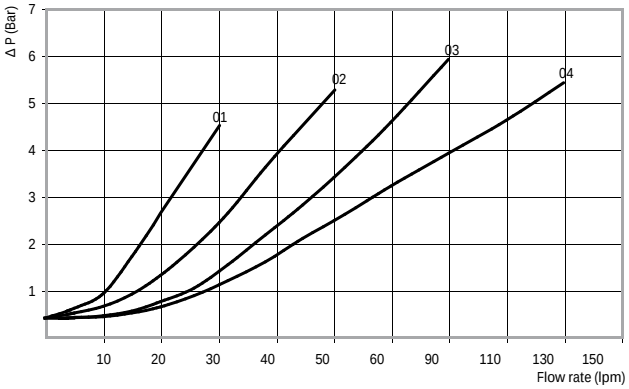

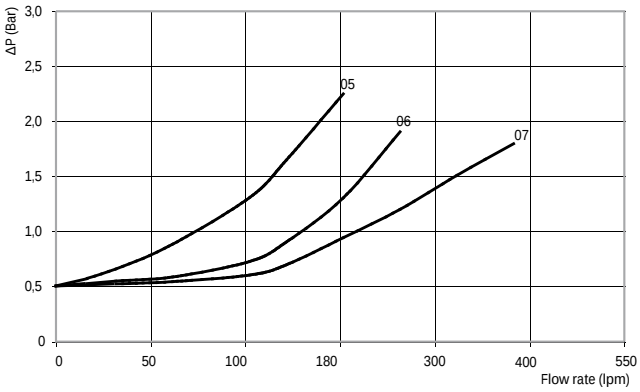

Materials: Zinc plated steel body, hardened steel poppet.

Ordering Code

CVL	- -	-

	Size BSP
01	1/4
02	3/8
03	1/2
04	3/4
05	1
06	1 1/4
07	1 1/2

Spring (bar)	
	0,5
4	4
8	8

Ordering Code Example: **CVL03** = 1/2 BSP - 0,5 bar Cracking pressure.